LED OUTDOOR SPOTLIGHT INSTALLATION GUIDE

Eurolumen

MODEL ELA113

ROUND-BASE OUTDOOR SPOTLIGHT

1

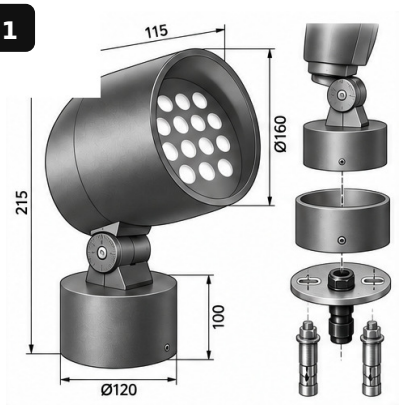

VERIFY FIXTURE / HIDDEN BASE PLATE / HARDWARE

2

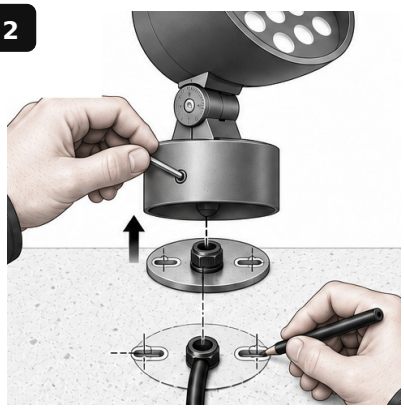

RELEASE BASE COVER / MARK 2 ANCHORS + CABLE

3

DRILL 2 ANCHORS / PREPARE SEALED CABLE ENTRY

4

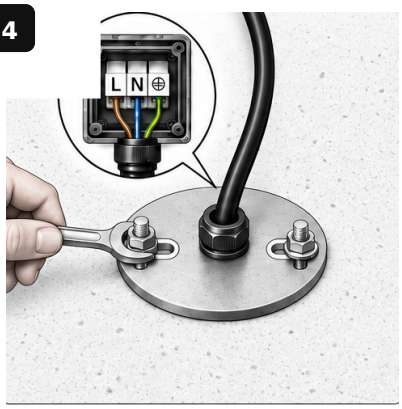

FIX INTERNAL PLATE / CONNECT / SEAL GLAND

5

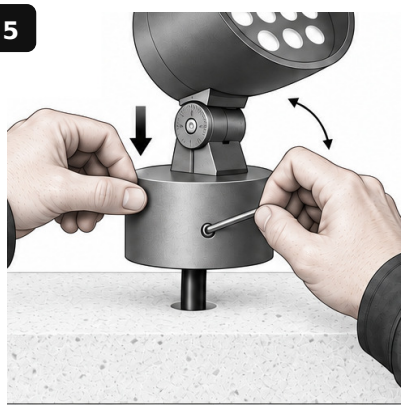

REFIT BASE COVER / SET AIM / TIGHTEN PIVOT

6

POWER ON / COMMISSION / VERIFY BEAM

OUTDOOR POWER CONNECTION

MATCHED SUPPLY (24 V DC / 220 V AC) → **PROTECTED CIRCUIT** (ISOLATOR + EARTH) → **IP-RATED JOINT** (SEALED GLAND) → **ELA113** (OUTDOOR)

1. Isolate and verify the supply before drilling, wiring or aiming.
2. Match the ordered 24 V DC or 220 V AC model; never cross-connect voltages.
3. Keep every junction accessible, sealed and protected from standing water.
4. Use anchors suitable for the substrate and the complete fixture load.

DO NOT ENERGIZE UNTIL THE BASE, PIVOTS, CABLE GLAND AND EARTH ARE SECURE.

SPOTLIGHT INSTALLATION DATA

PRODUCT SIZE	HEAD Ø160 × L115 / BASE Ø120 × H100
POWER OPTIONS	30 / 36 / 45 W
INPUT OPTIONS	24 V DC / 220 V AC
MOUNTING	HIDDEN 2-ANCHOR BASE PLATE
FINISH	BLACK
LOCATION	OUTDOOR
FINAL CHECK	AIM / LOCK / TEST

Installation must be performed by qualified personnel using the supplied mounting parts.
Confirm the product, voltage, bracket/base, anchor spacing and cable route before drilling.
For dual-head fixtures, support the complete load and tighten every pivot independently.
Retain this guide with the project handover and maintenance records.

WARNING

- ISOLATE POWER BEFORE INSTALLATION, AIMING, CLEANING OR SERVICE.
- VERIFY ANCHORS, EARTH, GLAND, BASE/BRACKET AND PIVOT LOCK BEFORE POWER ON.

CE **PE** **OUTDOOR**