LED UNDERWATER LIGHT INSTALLATION GUIDE

Eurolumen

MODEL ELA510

NICHE-MOUNTED UNDERWATER LIGHT

1

VERIFY FIXTURE / SUPPLIED NICHE / HARDWARE

2

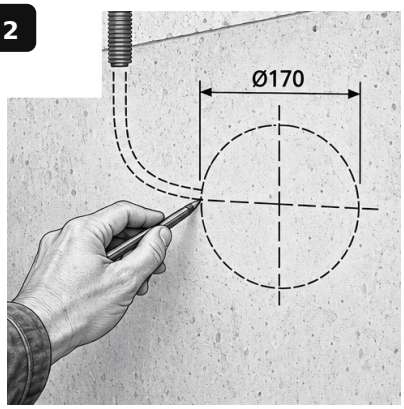

MARK ACTUAL NICHE OPENING / CONDUIT ENTRY

3

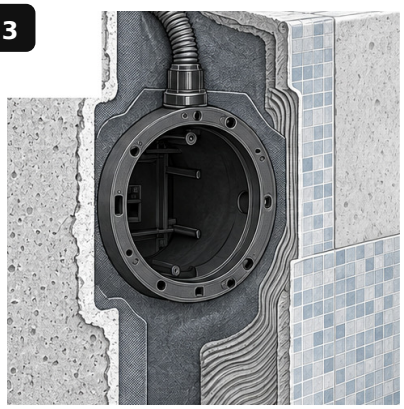

SET NICHE FLUSH / COMPLETE WATERPROOFING

4

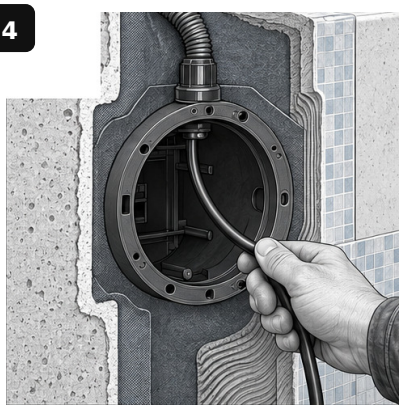

ROUTE UNBROKEN FACTORY CABLE / SERVICE LOOP

5

INSERT SAME FIXTURE / SEAT / TIGHTEN FASTENERS

6

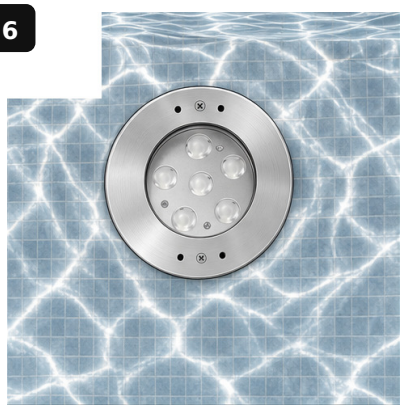

SUBMERGE / POWER ON / CHECK OUTPUT + SEAL

WATERPROOF POWER CONNECTION

SELV DRIVER (12 / 24 V DC) → **DRY JUNCTION** (ABOVE WATERLINE) → **SEALED CONDUIT** (NO FIELD SPLICE) → **ELA510** (SUBMERGED)

1. Isolate the supply and drain the water feature before installation.
2. Keep the driver and every junction dry above the maximum waterline.
3. Route the original factory cable continuously through sealed conduit.
4. Do not make an underwater field splice or modify the supplied cable.

USE ONLY A MATCHED SELV DRIVER AND IP68-RATED CABLE ENTRY SYSTEM.

UNDERWATER INSTALLATION DATA

PRODUCT SIZE	Ø162 × D65 mm
BODY / INSTALL	NICHE Ø170 × 100
INPUT	12 / 24 V DC SELV
MOUNTING	SUPPLIED NICHE
CABLE	FACTORY SEALED
LOCATION	UNDERWATER
RATING	IP68

Installation must be performed under the guidance of qualified technical personnel.

Confirm the actual product, supplied mounting parts, cable route and driver before drilling.

Waterproofing around every recess, anchor and conduit entry must be continuous and complete.

Retain this guide with the project handover and maintenance records.

WARNING

- ISOLATE POWER AND DRAIN THE WATER FEATURE BEFORE INSTALLATION OR SERVICE.
- VERIFY MOUNTING, SEALS, CABLE AND DRY JUNCTION BEFORE SUBMERGING.

CE **SELV** **IP68**