# LED OUTDOOR SPOTLIGHT INSTALLATION GUIDE

Eurolumen

**MODEL ELA101**

ROUND-BASE OUTDOOR SPOTLIGHT

**1**

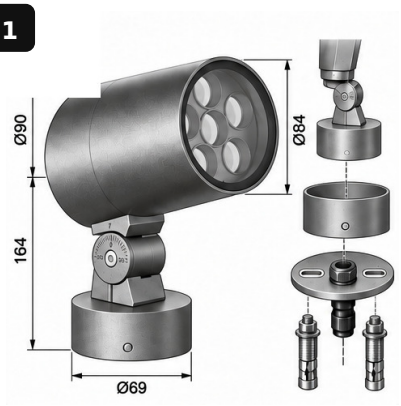


VERIFY FIXTURE / HIDDEN BASE PLATE / HARDWARE

**2**

RELEASE BASE COVER / MARK 2 ANCHORS + CABLE

**3**

DRILL 2 ANCHORS / PREPARE SEALED CABLE ENTRY

**4**

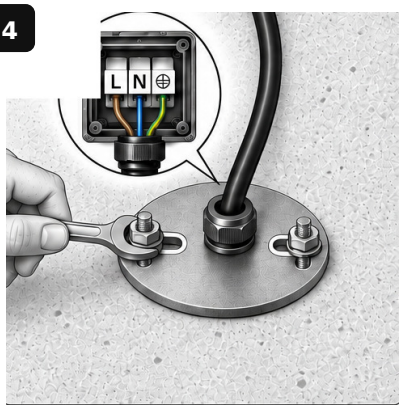


FIX INTERNAL PLATE / CONNECT / SEAL GLAND

**5**

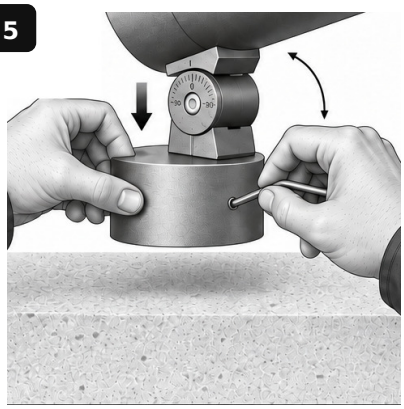

REFIT BASE COVER / SET AIM / TIGHTEN PIVOT

**6**

POWER ON / COMMISSION / VERIFY BEAM

## OUTDOOR POWER CONNECTION

**MATCHED SUPPLY** (24 V DC / 220 V AC) → **PROTECTED CIRCUIT** (ISOLATOR + EARTH) → **IP-RATED JOINT** (SEALED GLAND) → **ELA101** (OUTDOOR)

1. Isolate and verify the supply before drilling, wiring or aiming.
2. Match the ordered 24 V DC or 220 V AC model; never cross-connect voltages.
3. Keep every junction accessible, sealed and protected from standing water.
4. Use anchors suitable for the substrate and the complete fixture load.

**DO NOT ENERGIZE UNTIL THE BASE, PIVOTS, CABLE GLAND AND EARTH ARE SECURE.**

## SPOTLIGHT INSTALLATION DATA

| | |
|---|---|
| PRODUCT SIZE | HEAD Ø84 / REAR Ø90 / H164 / BASE Ø69 |
| POWER OPTIONS | 15 / 18 / 20 W |
| INPUT OPTIONS | 24 V DC / 220 V AC |
| MOUNTING | HIDDEN 2-ANCHOR BASE PLATE |
| FINISH | BLACK |
| LOCATION | OUTDOOR |
| FINAL CHECK | AIM / LOCK / TEST |

Installation must be performed by qualified personnel using the supplied mounting parts.
Confirm the product, voltage, bracket/base, anchor spacing and cable route before drilling.
For dual-head fixtures, support the complete load and tighten every pivot independently.
Retain this guide with the project handover and maintenance records.

## WARNING

- ISOLATE POWER BEFORE INSTALLATION, AIMING, CLEANING OR SERVICE.
- VERIFY ANCHORS, EARTH, GLAND, BASE/BRACKET AND PIVOT LOCK BEFORE POWER ON.

CE PE OUTDOOR