LED UNDERWATER LIGHT INSTALLATION GUIDE

Eurolumen

MODEL ELA502

ADJUSTABLE UNDERWATER SPOTLIGHT

1

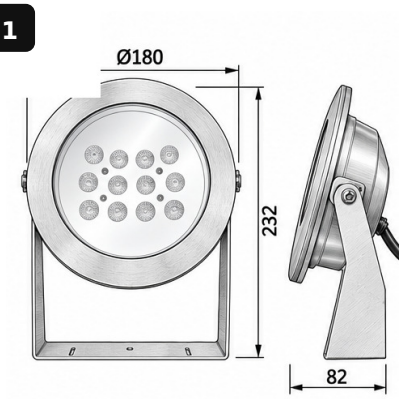

VERIFY FIXTURE / U-BRACKET / HARDWARE

2

USE U-BRACKET AS TEMPLATE / MARK ANCHORS + CABLE

3

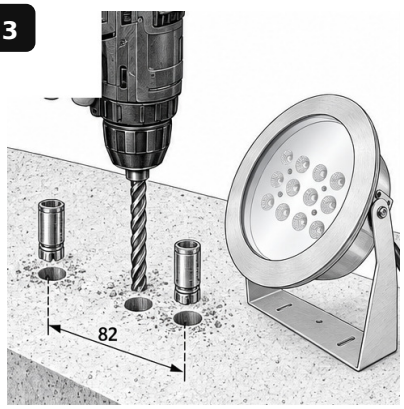

DRILL ANCHORS / PREPARE SEALED CABLE ROUTE

4

FIX ACTUAL U-BRACKET / ROUTE FACTORY CABLE

5

MOUNT SAME FIXTURE / SET AIM / TIGHTEN PIVOTS

6

SUBMERGE / POWER ON / FINAL OUTPUT + SEAL CHECK

WATERPROOF POWER CONNECTION

SELV DRIVER (12 / 24 V DC) → **DRY JUNCTION** (ABOVE WATERLINE) → **FACTORY CABLE** (NO FIELD SPLICE) → **ELA502** (SUBMERGED)

1. Isolate the supply and drain the water feature before installation.
2. Keep the driver and every junction dry above the maximum waterline.
3. Route the original factory cable continuously through sealed conduit.
4. Do not make an underwater field splice or modify the supplied cable.

USE ONLY A MATCHED SELV DRIVER AND IP68-RATED CABLE ENTRY SYSTEM.

UNDERWATER INSTALLATION DATA

PRODUCT SIZE	Ø180 × H232 × D82 mm
BODY / INSTALL	MODEL-SPECIFIC MOUNTING
INPUT	12 / 24 V DC SELV
MOUNTING	ADJUSTABLE U-BRACKET
CABLE	FACTORY SEALED
LOCATION	UNDERWATER
RATING	IP68

Installation must be performed under the guidance of qualified technical personnel.

Confirm the actual product, supplied mounting parts, cable route and driver before drilling.

Waterproofing around every recess, anchor and conduit entry must be continuous and complete.

Retain this guide with the project handover and maintenance records.

WARNING

- ISOLATE POWER AND DRAIN THE WATER FEATURE BEFORE INSTALLATION OR SERVICE.
- VERIFY MOUNTING, SEALS, CABLE AND DRY JUNCTION BEFORE SUBMERGING.

CE **SELV** **IP68**